A course by Mónica Vega

DRAWING LIGHT

This document is an example that will help you complete the second assignment in this unit, in which you'll develop a conceptual lighting presentation of the space you're using for this course.

Current Space

General LED ceiling light, cold temperature. Plastic screen with an opaline finish.

Decorative table light fixture with an E27 lamp, warm temperature. Glass screen with an opaline finish.

Candlelight

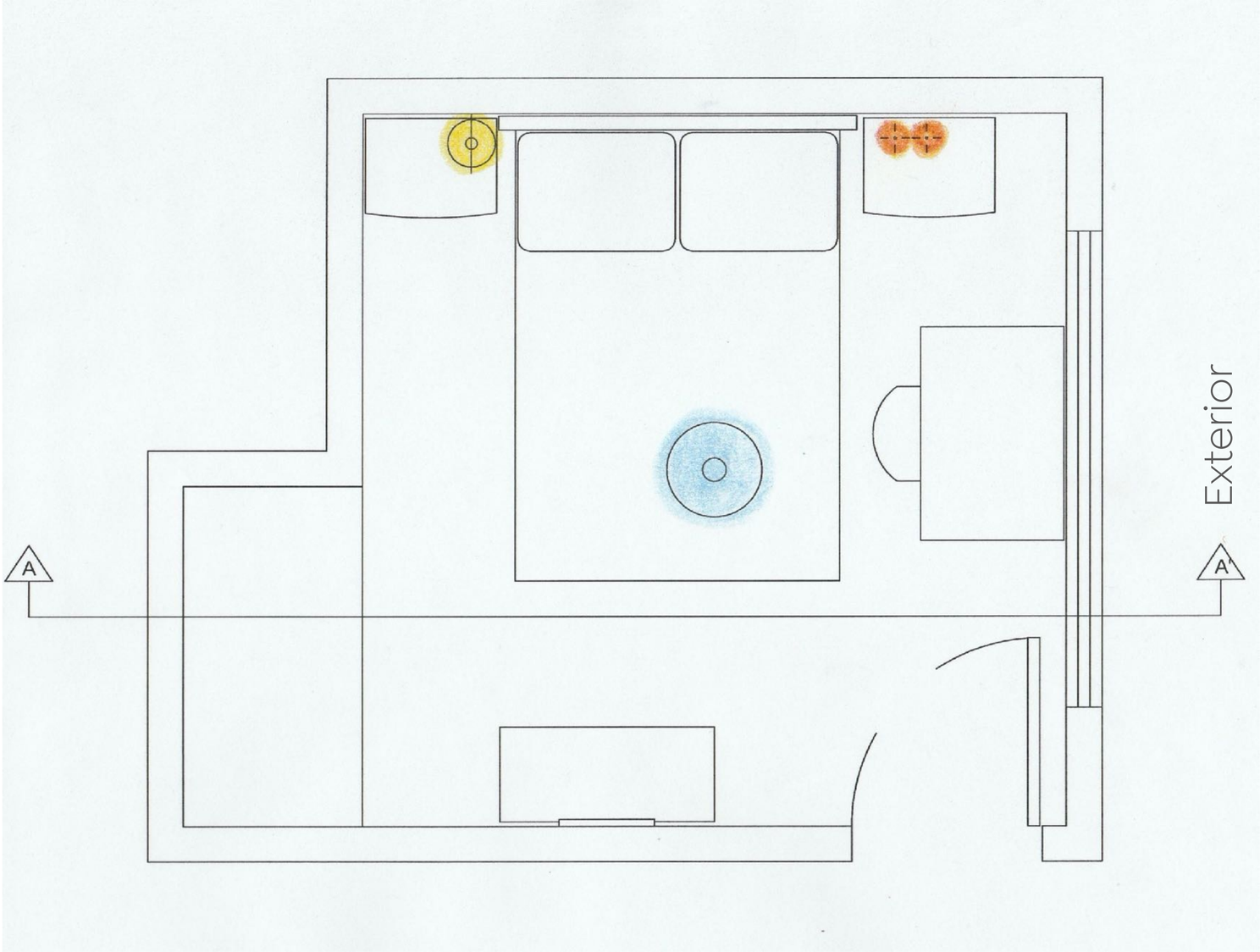

A-A Cross-Section

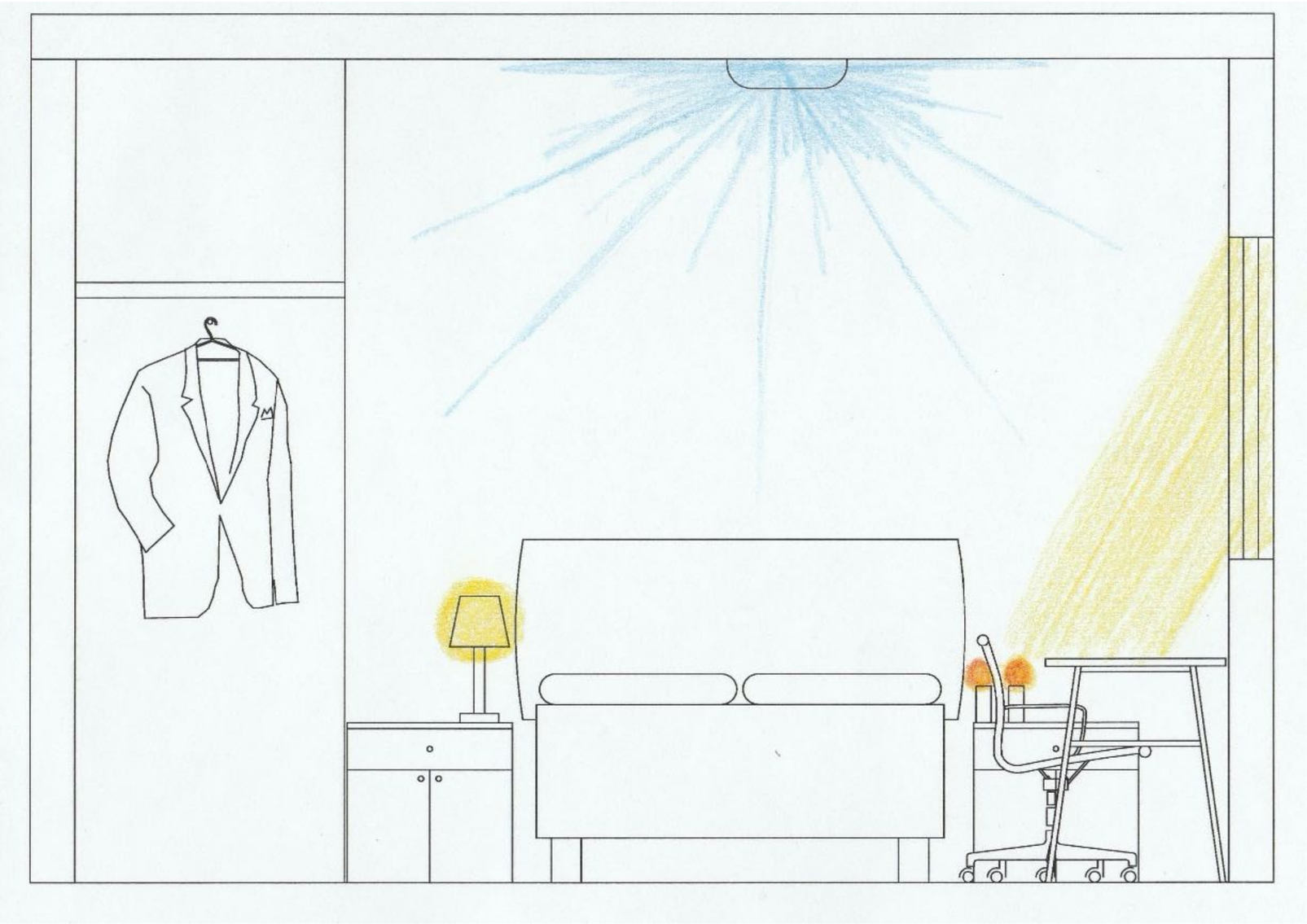

User in the Space

The space is used by just one person.

The activities carried out are:

Sleeping

Working approximately 9 to 10 hours per day

Reading, listening to music

Partaking in other craft-focused pastimes

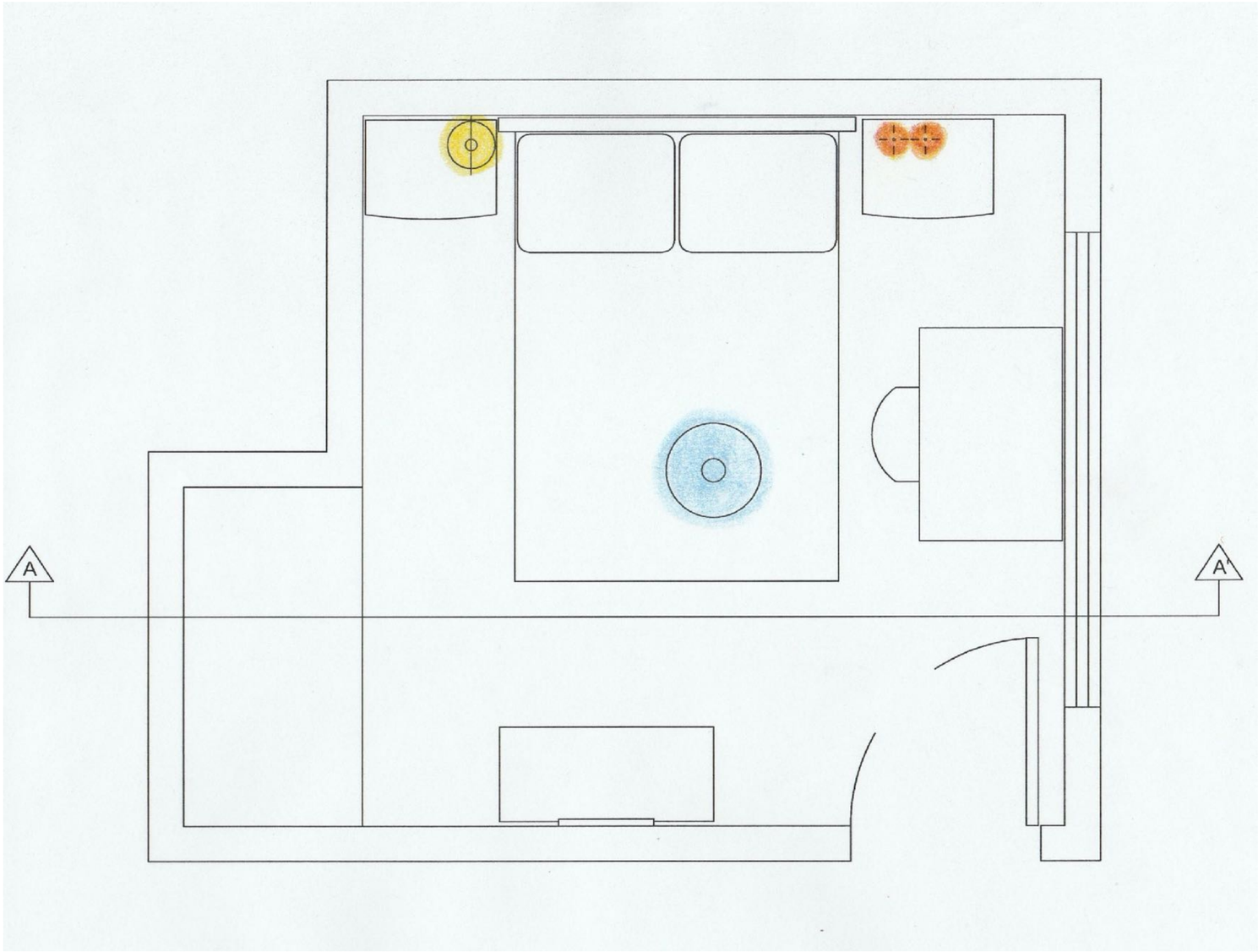

User in the Space

The spaces to consider with more light capacity:

1. **Desk area**
2. **Vanity table area**
3. **Closet area and organization up high**

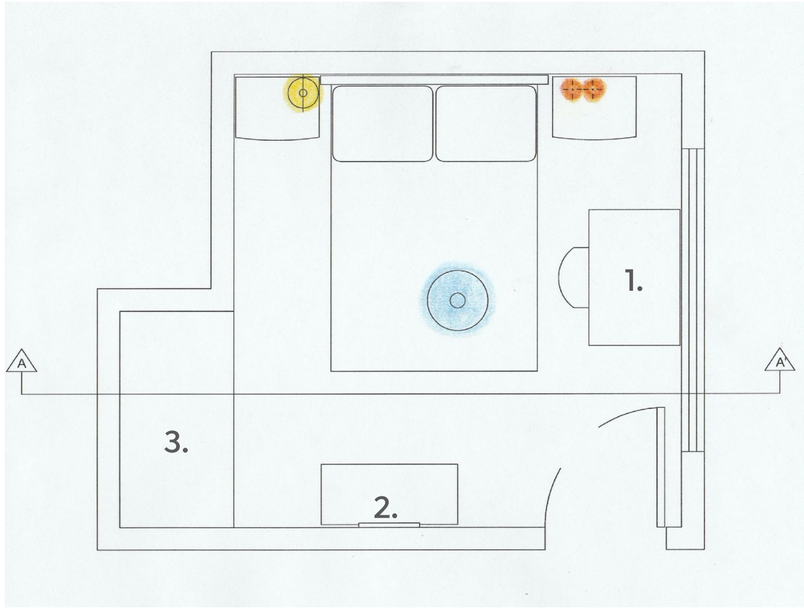

1. Desk area
This is located in front of a window. During the day extra artificial lighting isn't necessary. After 5 or 6 p.m., the ceiling light should be turned on. Since it's a work area, the light temperature should be cold.

2. Vanity table area
Lighting needs to be installed around the mirror and aimed at the user so they can do their hair and makeup. The ideal light temperature
is cold.

3. Closet area and upper-level organization
The user indicated that this space has the least amount of light. It's a problem because in the mornings they can't distinguish well between colors when deciding what to wear. In addition, the upper area has a big storage space with purses, which requires a museum exhibition style of lighting. The suggested light temperature is warm.

User in the Space

General area of the space:

Since it’s a bedroom that was adapted to also be a work space, the current ceiling light doesn't light the whole space well enough. The ideal temperature to use is warm, not cold like the current temperature.

Decorative table lamp and candles:

The user decided to keep them where they currently are. Since they’re just for decoration and/or reading at night, they're in reach of the bed so they can be turned off easily.

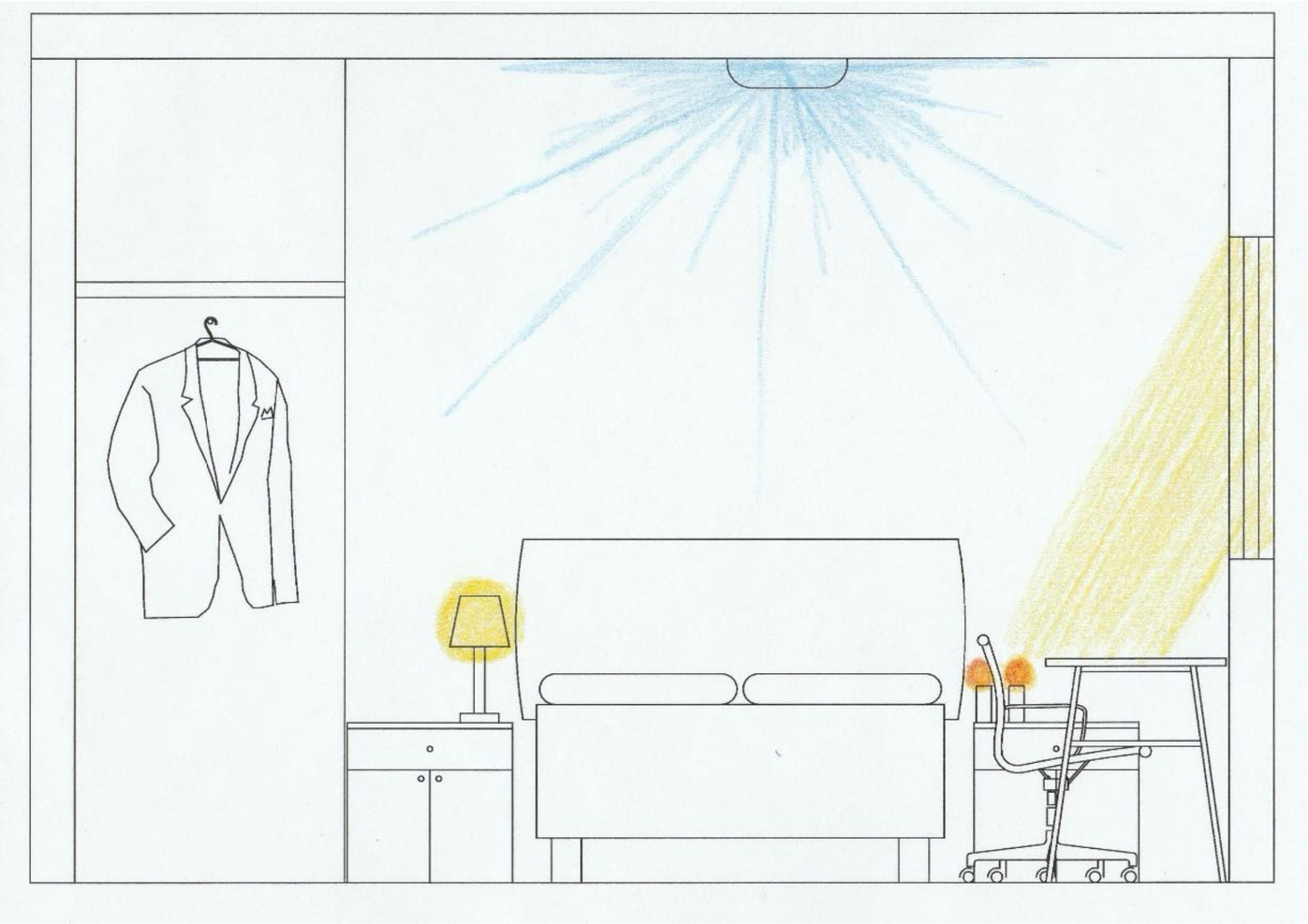

Beam of Light

New light sources in the space

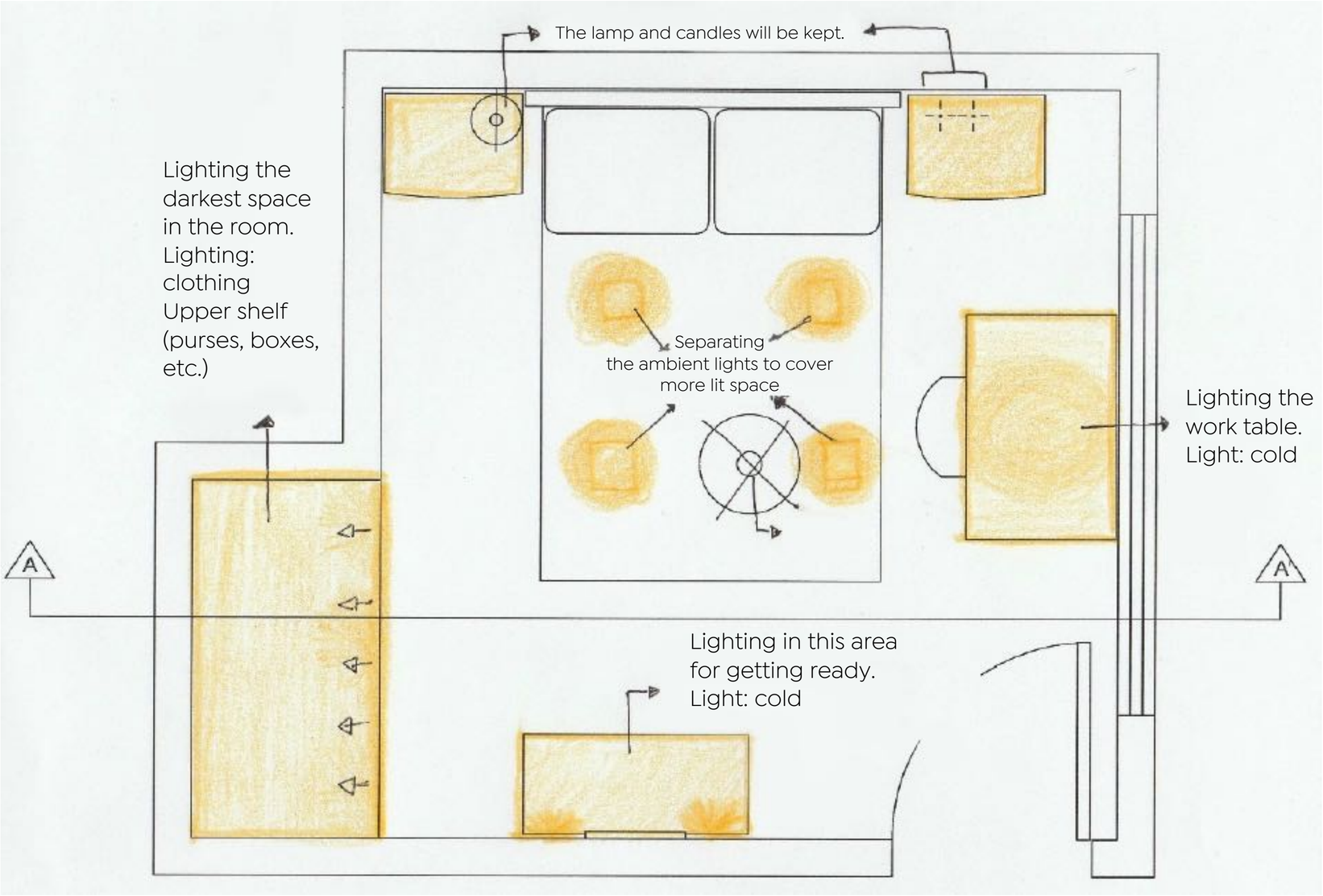

Mood Board

Light in the space

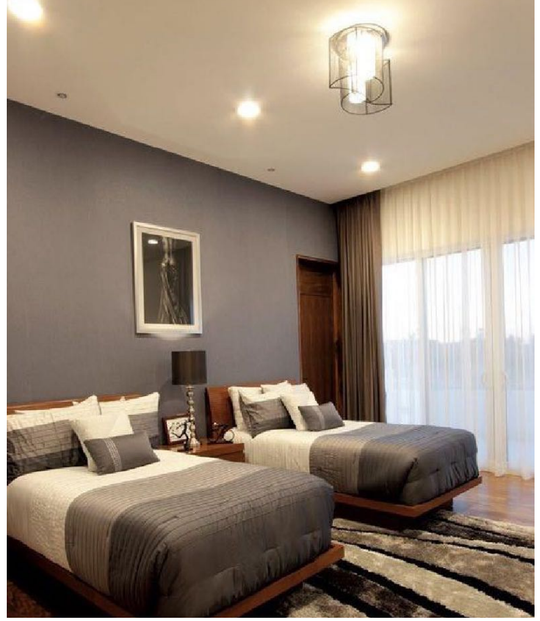

General light in the space, keeping in mind the recessed LED ceiling light fixtures.

Mood Board

Light in the space

Closet area, with LED strip lights or directional light fixtures.

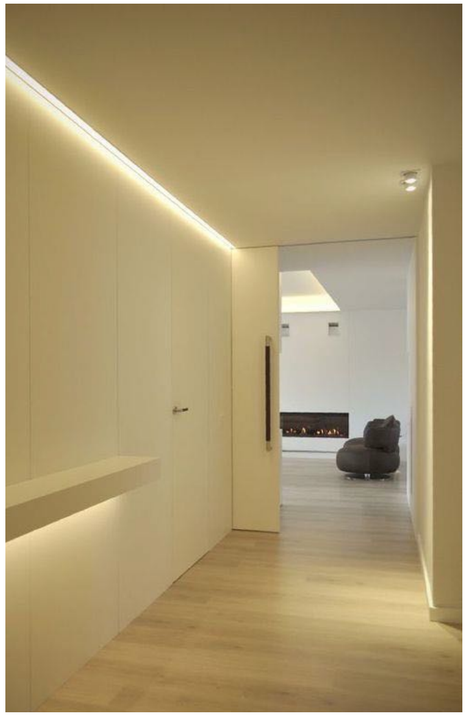

Vanity table with direct light either around the mirror or just one light fixture on each side.

Mood Board

Light in the space

The desk area can be improved with lighting in two ways:

- Desk-style table lamp
- Hanging ceiling lamp

Drawing Light

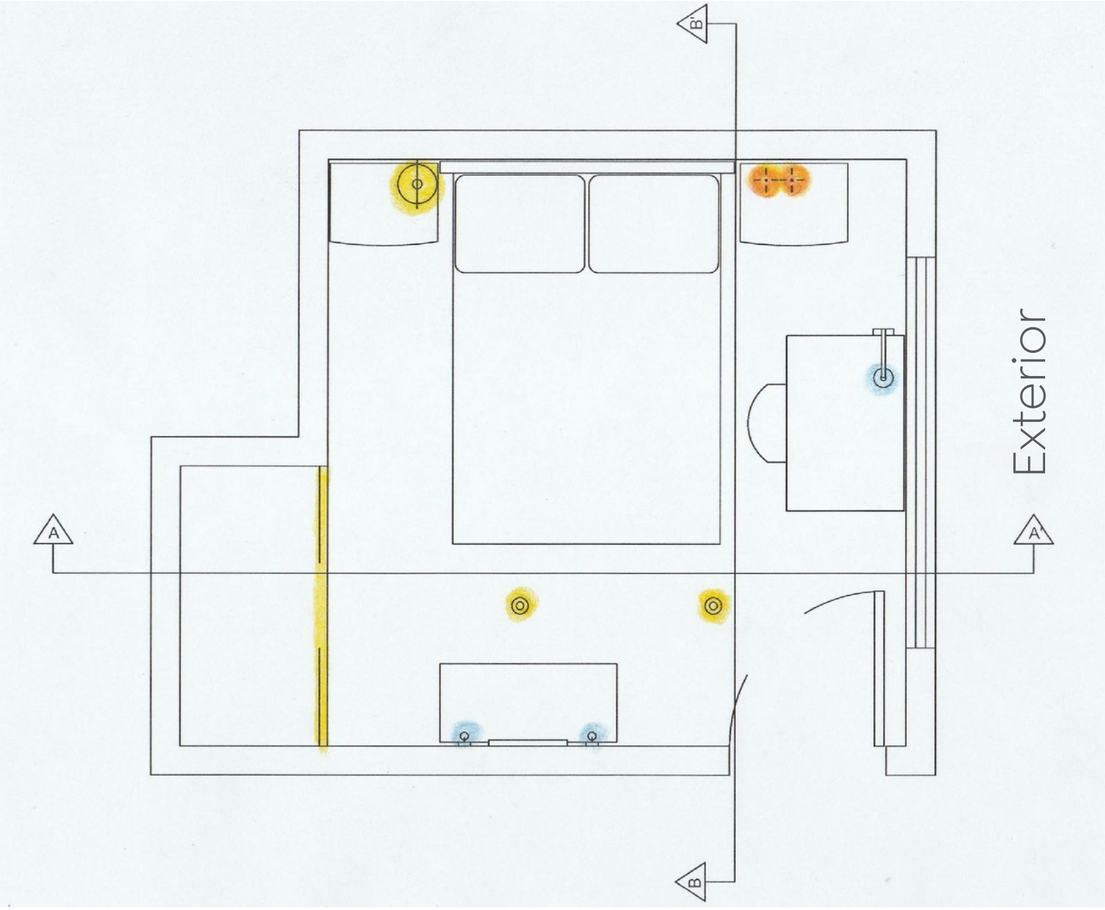

Decorative table light fixture with an E27 lamp, warm temperature. Glass screen with an opaline finish.

Candlelight

General wall-mounted LED light fixture, cold temperature. Glass screen with an opaline finish.

General recessed LED round flat panel ceiling light fixture, warm temperature.

LED strip at a 45° profile, warm temperature.

Decorative desk light fixture with an E27 lamp in a cold temperature.

A-A’ Cross-Section

B-B’ Cross-Section

Types of Light Fixtures

Lamp to recess in the ceiling

Brand: Tecnolite
Finish: White
Power: 10 W
Lumens: 970 lm
Lm/W: 97
Distribution: 127 – 277 V
Color temperature: 3000 K
Light color: Soft warm
Useful life: 25,000 h
Driver: Electronic driver

Type of bulb: Tecnolite
Opening angle: 120°
IRC: 82
FP: 0.89
Ingress protection (IP): 30
Recessing cut: 125 mm
IK: 4
Weight: 0.42
Casing material: ABS

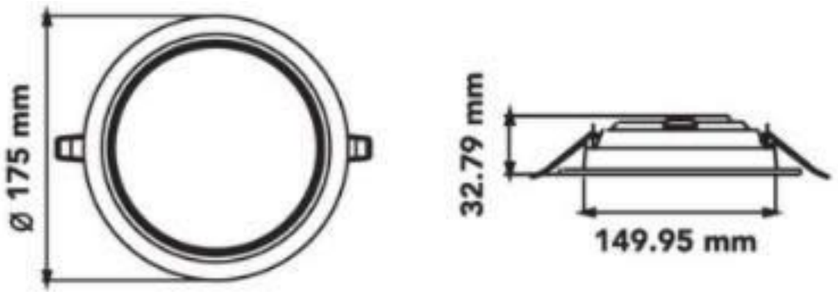

LED strip at a 45º profile

Aluminum profile with concave mini light contours

Brand: SIECLED
Model: 19015R80DKIT
Material: anodized aluminum
Diffuser: PMMA
IP: 44
Total length: 250 cm
Includes: Final covers and supporting staples
Color temperature: 3000 K
Light color: Soft warm
Useful life: 25,000 h
Driver: Electronic driver

LED strip medium strength

Brand: SIECLED
Model: SSL35627K1A
Type of LED: 2835
Number of LEDs: 144 LEDs/m
IP: 20
Entrance voltage: 120
Consumption: 7.5 W/m
Temperature: 2700 K
Luminous flux: 730 – 740 Lm/m
IRC: 95
Opening angle: 115º
Useful life: 35,000 h
Cuts: Every 3 LEDs or 2.1 cm

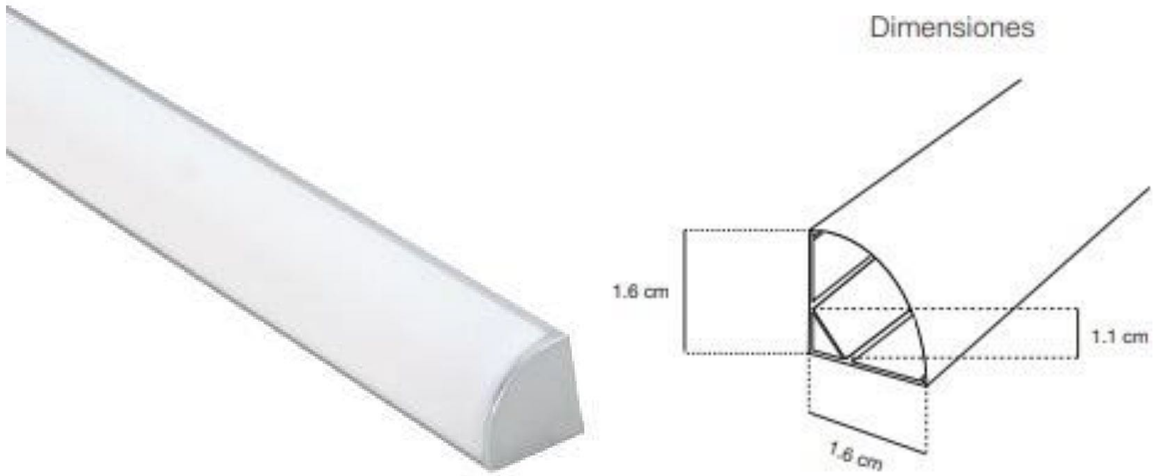

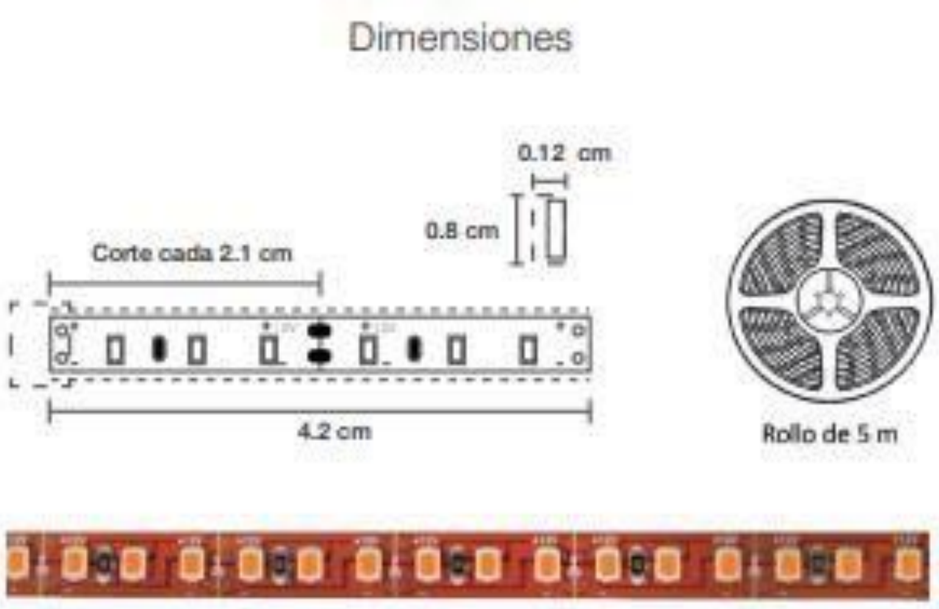

Interior lamp to overlay

Name: FILOS
Brand: Tecnolite
Model: 60TL1820MVS
Material: Steel laminate
Finish: Satin/opaline glass
Base: G9
Volts: 100 – 240 V
Power: 3 W
Current: 0.03. 0.01 A
Frequency: 50 Hz/ 60 Hz

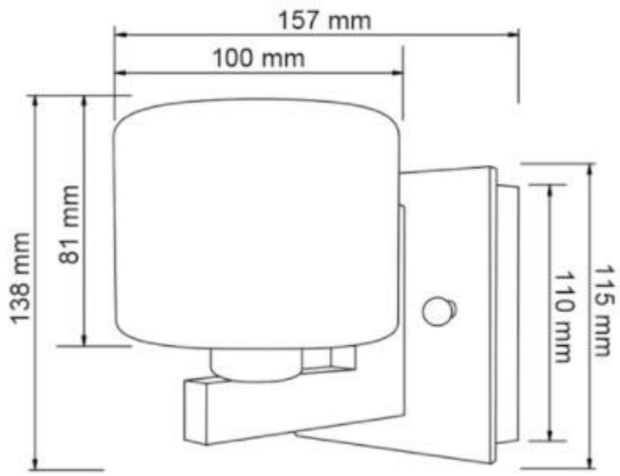

Desk lamp with a clamp

Name: LINK CLAMP BACK
Model: 210815304
Brand: Pablo Designs
Material: Aluminum body; polycarbonate bezels; zinc/steel table base; base: steel base with aluminum foot; aluminum wall fixtures and clamp grommet.
Color: Black
Type of bulb: (99x) High-output LED array
Temperature: 3000 K
Power: 7 W
Voltage: 120 – 240V 60 Hz
Luminosity: 350 lumens
IP rating: 120 IP
Weight: 1.5 kg

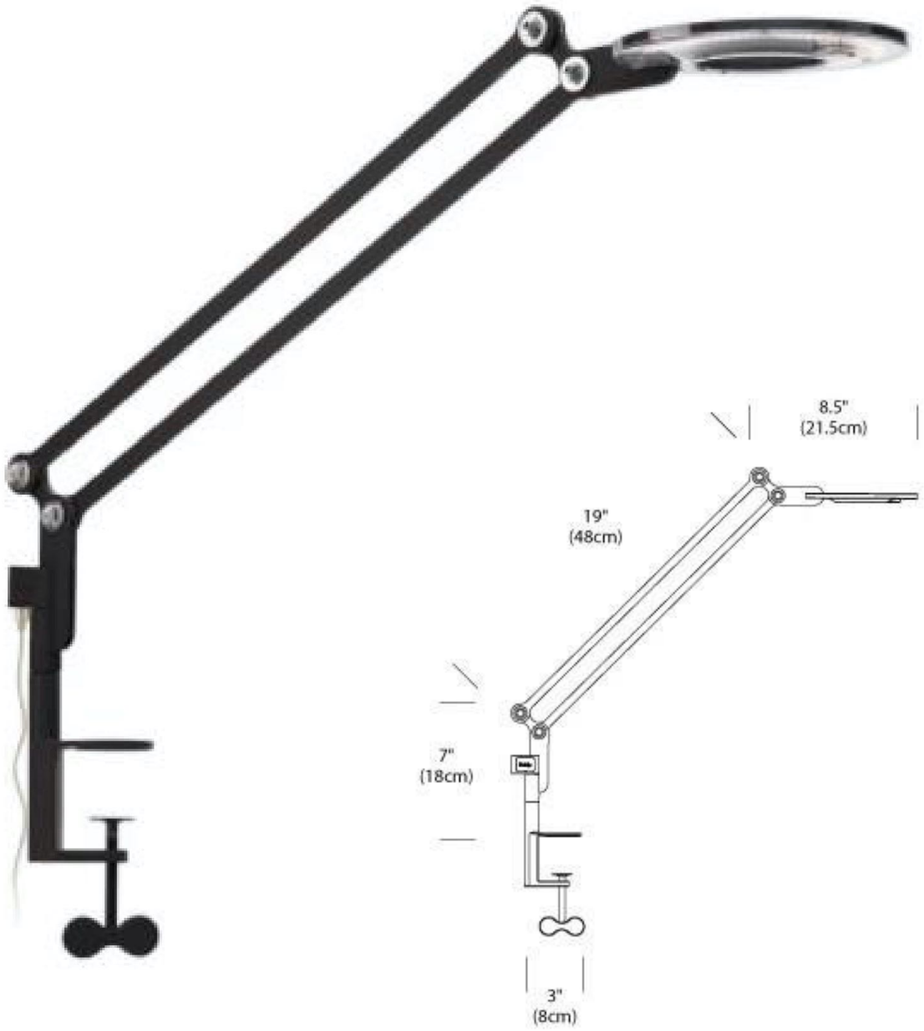

DOMĚSTIKA